ALEX

Lemonade STAND

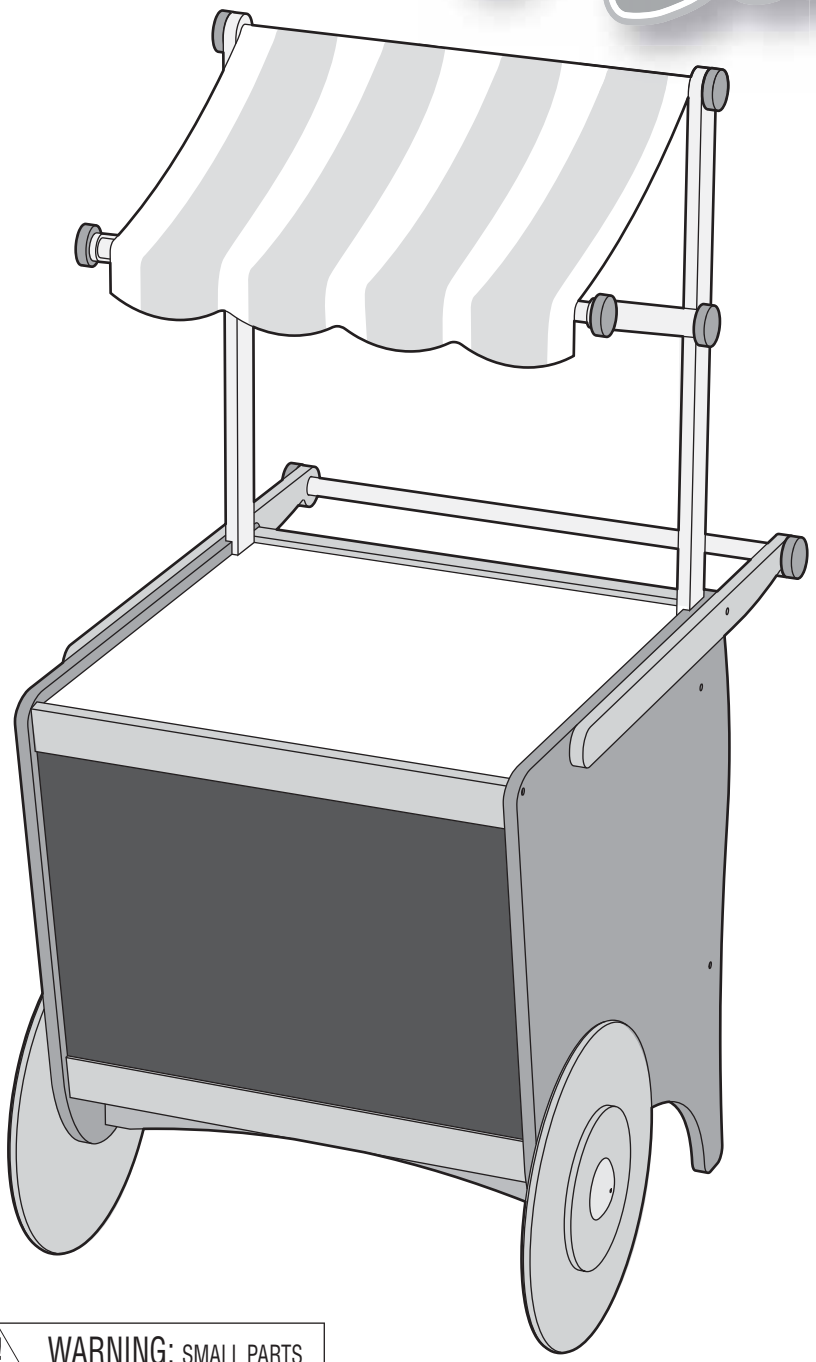

Preparing the chalkboard surface:
You will need a piece of chalk and paper towel. First, holding the piece of chalk horizontally, rub the chalk over the entire chalkboard surface. Next, take the paper towel and, using a circular motion, rub the towel over the chalkboard surface. Finally, erase the chalk off the entire surface. You have just seasoned your chalkboard and it is ready for use.

⚠ WARNING: SMALL PARTS
CHOKING HAZARD - Not for children under 3yrs.
Adult assembly required

Caution: Keep screws, small parts and plastic bags out of children's reach during and after assembly

#14N

©2009 ALEX: Northvale, NJ 07647

Visit our web site at www.alextoys.com

TOOLS: Phillips head screwdriver Included.

2 Side panels	2 Back bars	1Top shelf	1 Long dowel
	2 Front bars	1Bottom shelf	1 Threaded dowel - long
2 Wheel assemblies	1Wheel support	1Chalkboard	1 Threaded dowel - short
	2 Vertical awning supports		1 Awning
2 Awning braces		2 Handles	
		6 Wooden caps	Hardware 8 Short screws 14 Long screws
		2 Threaded wooden caps	

1

Attach the two back bars, two front bars, and wheel support to one of the side panels using six long screws. Make sure that the recessed holes on the side panel are facing out so that the screws sit flush.

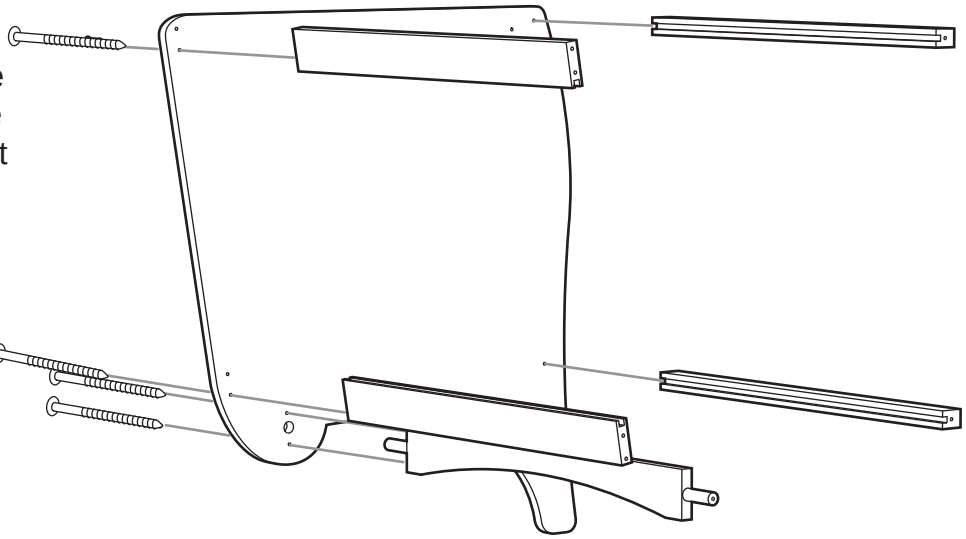

#14N

©2009 ALEX: Northvale, NJ 07647

Visit our web site at www.alextoys.com

2

Slide the chalkboard, top shelf, and bottom shelf into the grooves as shown.

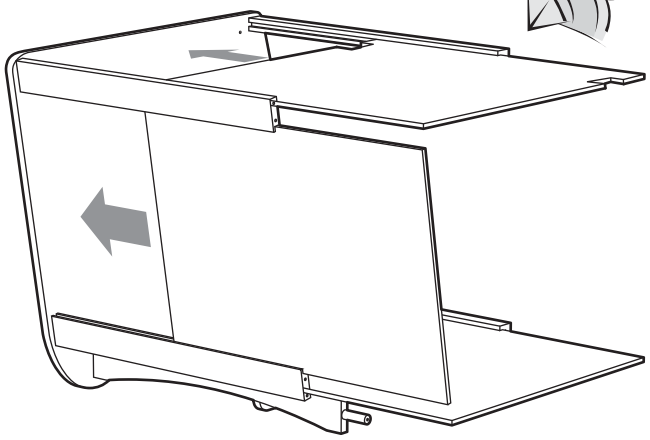

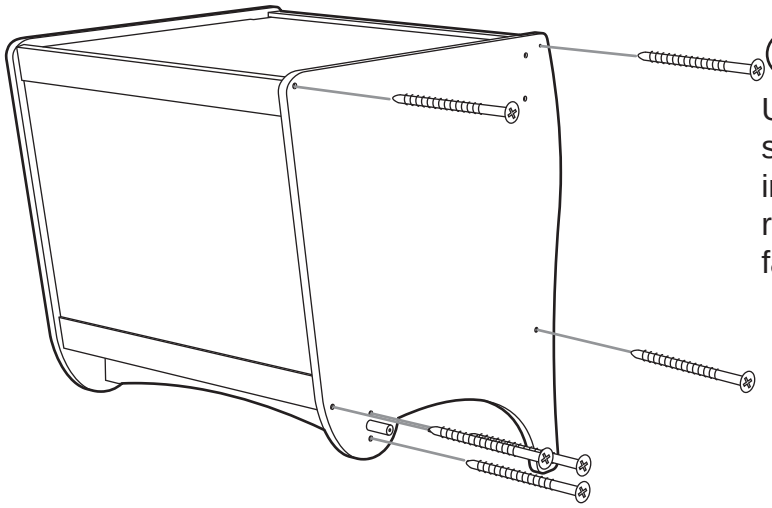

3

Using six long screws and the screwdriver. Screw the other side panel into place as shown. Make sure that the recessed holes on the side panel are facing out so that the screws sit flush.

4

Place one wooden washer on the wheel axle. Then place the wheel on the dowel. Secure this in place by screwing through wooden cap with one long screw. Repeat on the other side. Do not over tighten or the wheels will not turn.

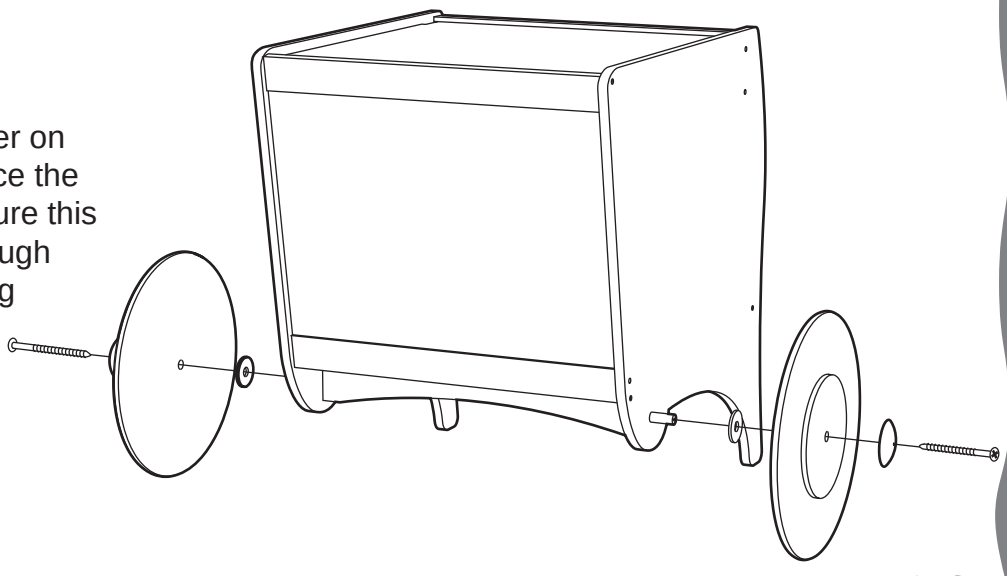

#14N

©2009 ALEX: Northvale, NJ 07647

Visit our web site at www.alextoys.com

5

Attach the awning brace to the vertical awning support using the threaded wooden cap as shown. Repeat this process for the other side.
Thread the awning over the threaded dowels. Make sure that the dowel with the shorter threaded section is at the top. Then secure these in place on the vertical supports with four wooden caps.

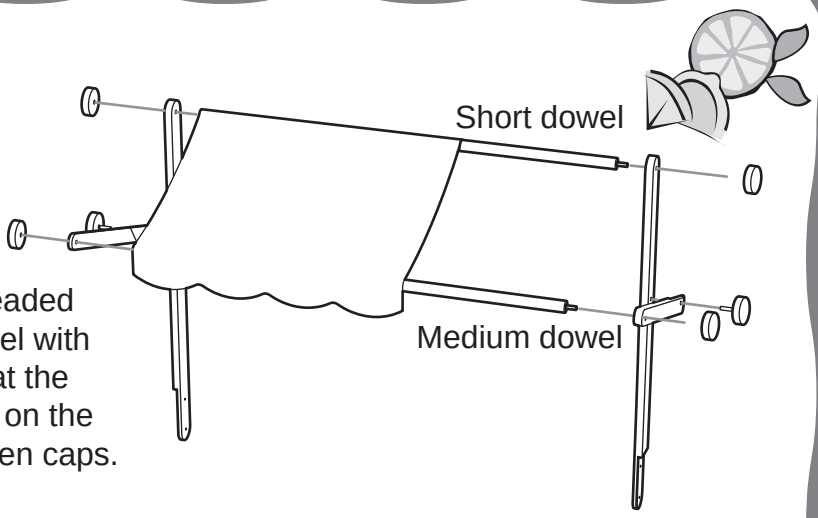

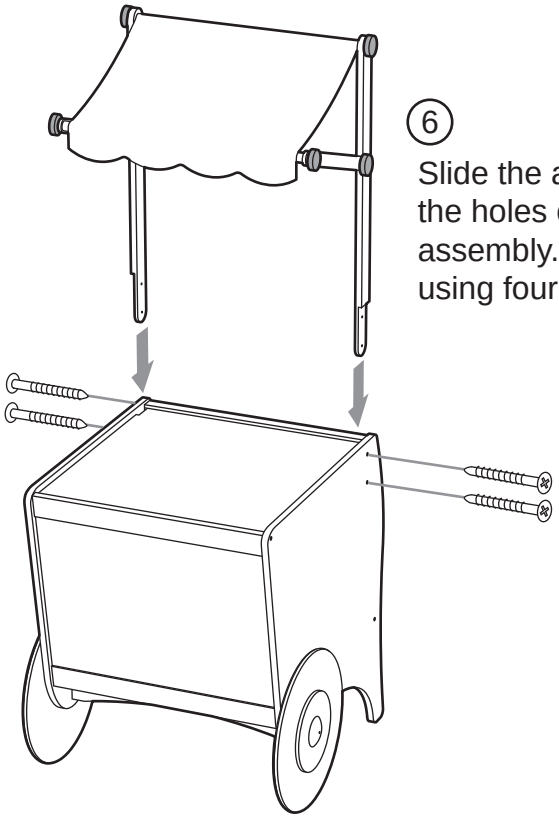

6

Slide the awning assembly into the holes on the top of the lower assembly. Secure it in place using four short screws.

7

Screw the handles in place with four short screws. The two front screws should be attached from the inside. Slide the long dowel through the holes on the handles. Secure it in place with two wooden caps.

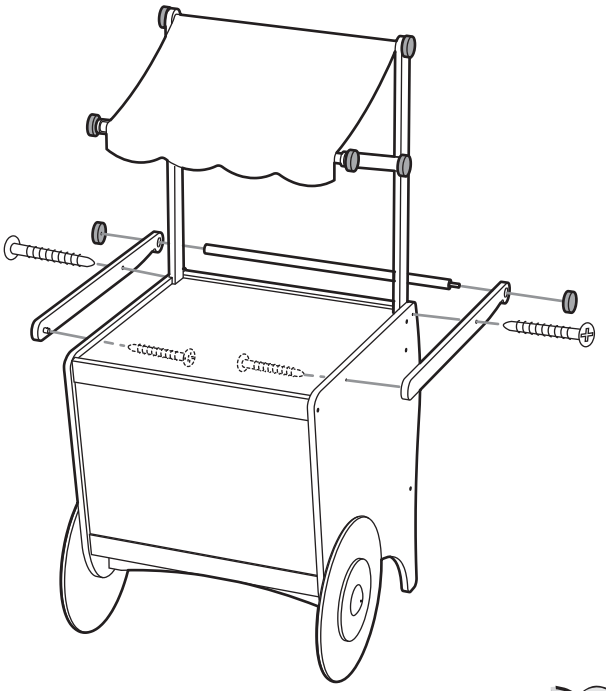

#14N

©2009 ALEX: Northvale, NJ 07647

Visit our web site at www.alextoys.com